Practical No. 3

MACHINE SHOP (LATHE)

Machine tool:

A machine tool is a device in which energy is utilized for shaping the material into a product by removing the excess material in the form of chips.

Machining:

Machining is process of shaping the metal product from various machine tools.

Lathe :

The main function of a lathe is to remove metal from a work piece to give the required shape and size by holding the work securely and rigidly on the machine and then turning it against cutting tool which will remove metal from the work in the form of chips. The most common and widely used is the center lathe for preparing of various turning operation.

A lathe basically consists of a bed to provide support a Headstock, a cross slide to traverse the tool, a tool post mounted on the cross slide. The spindle is drive by a electric motor through a gear box to obtain a range of speeds, The carriage moves on the bed guide ways parallel to the work piece and the cross slide provides the transverse motion. A feed shaft and lead screw are also provided to power the carriage for auto movement and for cutting the thread respectively.

Practical applications to make use of a lathe:

- Cylindrical shaft, stepped shaft, eccentric shaft, crankshaft, multiple splined shaft.
- Bolt and nuts, bushes, machine handles, knobs and pulleys etc.

Main parts of lathe and description:

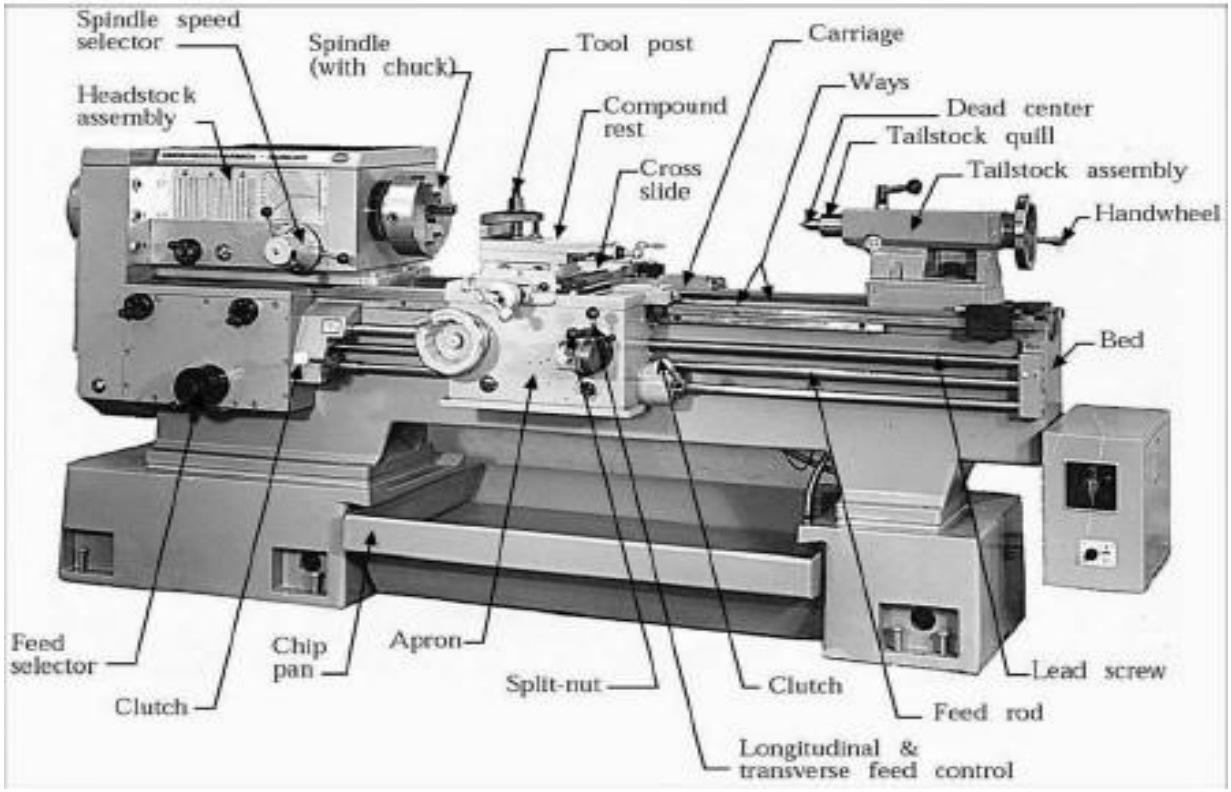

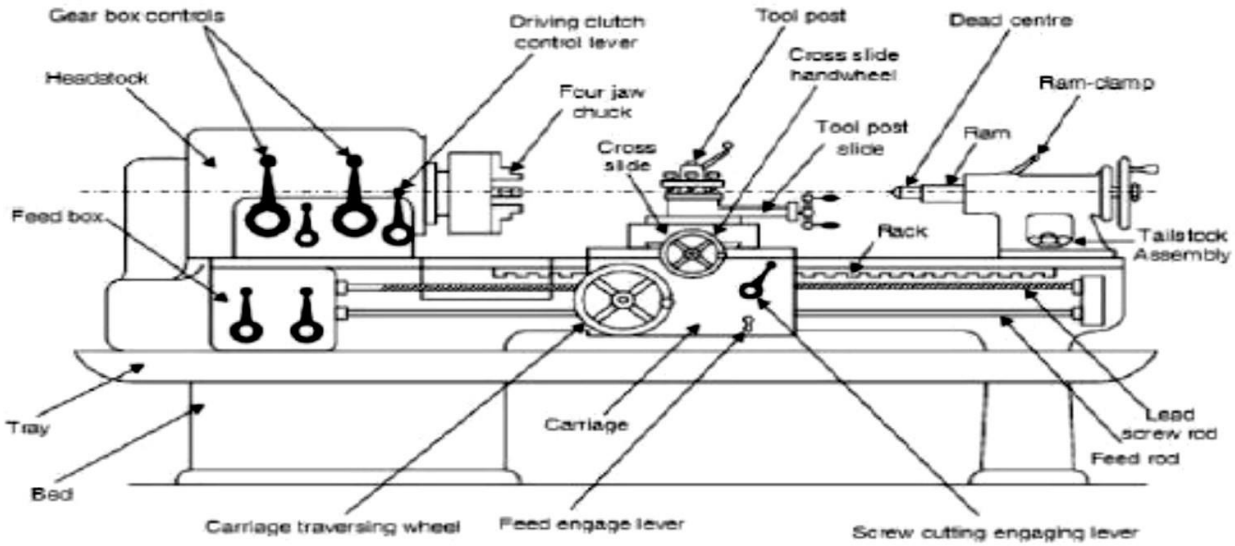

Fig. 1.1 Centre lathe

Sr. No.	Parts	Description
1	**Head stock**	Head stock is one type of gear box & it is the heart of the machine. Which gives various speed by means of gear arrangement. The gear change lever is given in the head stock body to change the speed.
2	**Chuck Plate**	Chuck plate is provided to mount the chuck on it.
3	**Tool Post**	Tool post is mounted on the compound slide, which is used to hold the tools.
4	**Compound Slide**	Compound slide is used to give angular & small longitudinal motion to the tool.
5	**Saddle & Cross Slide**	Cross slide is mounted on the saddle. Cross slide give transverse motion whereas saddle gives longitudinal motion.
6	**Tail Stock**	Tail stock is used to hold the job for between centre turning.
7	**Lead Screw**	Lead screw is used for threading operation. Which is also known as thread shaft.
8	**Apron**	Apron is a gear box which gives automatic feed to the carriage.
9	**Feed Shaft**	Feed shaft is used for auto feeding.
10	**Norton gear box**	Norton gear box is used to obtained metric as well as BSW thread in various pitch for threading operation.
11	**Tray**	Tray is provided to collect the cutting fluid & chip when machine is in running condition.
12	**Side Cover**	Side cover is provided in the back side of the machine for protection of gear train & for safety purpose.

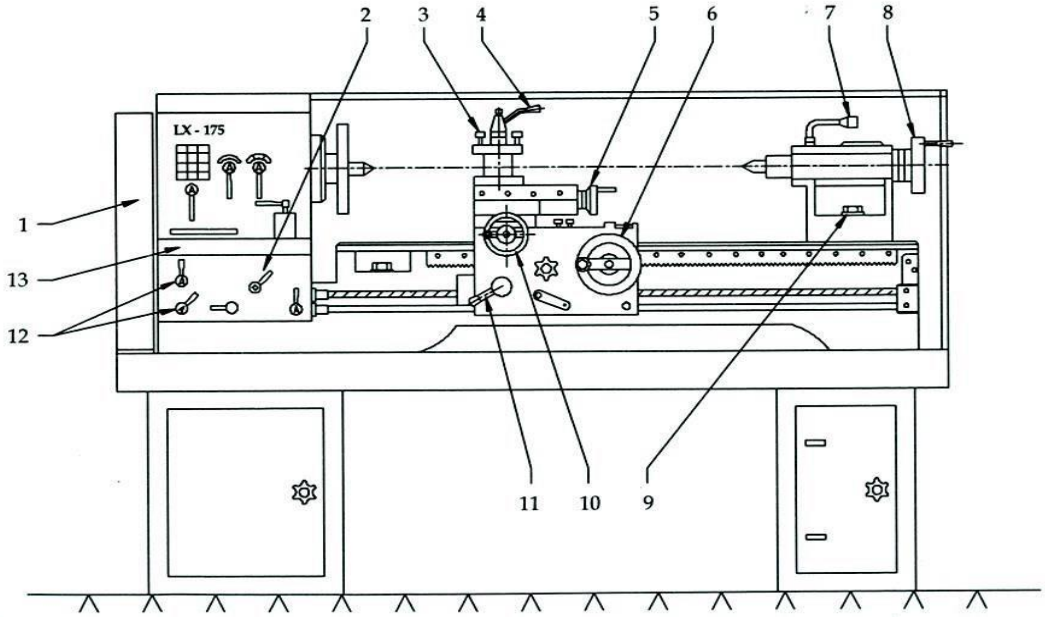

1 R / F Speed Change Lever
2 Speed Change Lever
3 Tool Post Bolt
4 Tool Post Handle
5 Compound Hand Wheel
6 Apron Hand Wheel
7 Quill Clamping Lever
8 Tail Stock Hand Wheel
9 Clamping Bolt
10 Surface Hand Wheel
11 Half Nut Operating Lever
12 Norton Gear Box Opeating Levers
13 Operating Pannel

1) R/F Speed Change Lever

The function of this lever is to change the direction of motion of lead screw. It is advisable to operate this lever only after the machine stops.

2) Speed Change Lever

We can obtain 8 various speed as per our requirement by operating this lever. Don‟t operate this lever when the machine is in running condition.

3) Tool Post Bolt

The cutting tool is holding by these bolts. Always use spanner to tighten & loosen these bolts.

4) Tool Post Handle

During the turning process sometimes it is necessary to give an angle to the cutting tool. By means of this lever we can clamp the tool post at required position.

5) Compound Hand Wheel

This hand wheel in longitudinal direction operates the compound upper side. A graduated dial ring is provided with this hand wheel. On this dial ring 1 division = 0.021mm.

6) Apron Hand Wheel

This hand wheel is used to give longitudinal travel to the carriage with surface and compound slide on the bed guide ways. On apron hand wheel 1 division = 0.200 mm.

7) Quill Clamping Lever

By means of this lever, tailstock quill can be clamped in required position.

8) Tail Stock Hand Wheel

This hand wheel operates the tailstock quill. The graduated dial ring is provided on this hand wheel. On this dial ring 1 division = 0.050 mm.

9) Clamping Bolt

The function of this bolt is to locate the tail stock body at required position on the bed guide ways.

10) Surface Hand Wheel

This handle operates the surface in transverse direction. A graduated dial ring is provided on this hand wheel. On this dial ring 1 division = 0.10 mm.

11) Half Nut Operating Lever

This lever is used to engage or disengage the lead screw while threading operation is performed.

12) Norton Operating Levers

Norton gear box is operated by means of this lever so that various pitch of thread can be selected.

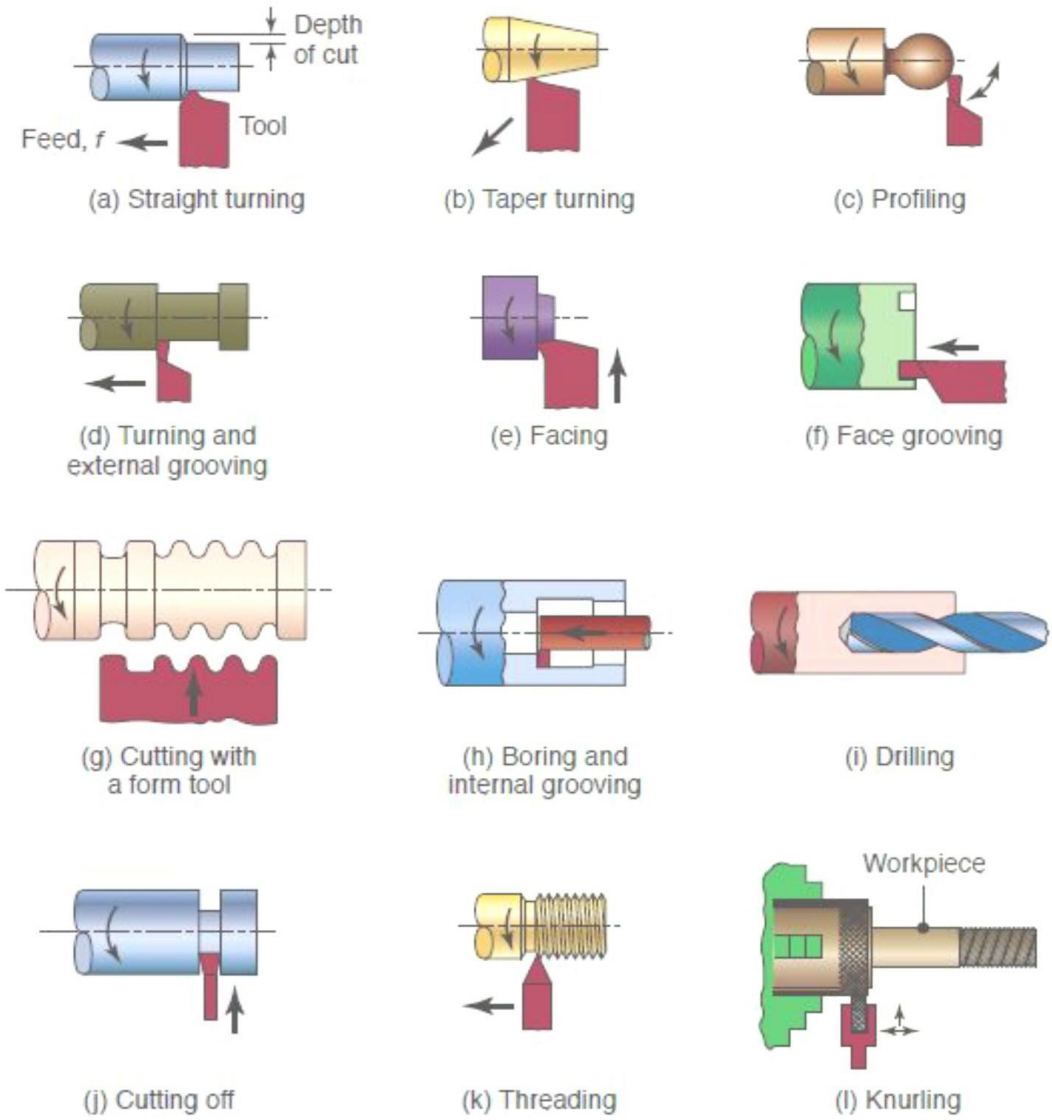

1. Facing: Facing is the operation of machining from the work-face by feeding the tool at right angles to the work axis at end of a work piece to produce flat surface.

Purpose:

- To remove the rough surface on the face of the work and have finished faces.
- To have a face at right angles to the axis of the work.
- To have a reference plane to mark and measure the lengths of the work.
- To maintain the total length of the work.

2. Center drilling:

Centering is the operation of producing conical holes in work pieces at the ends to provide bearing surface for lathe centers.

The axis of the work coincides with the lathe axis.

3. **Plain turning:** The plain turning operation involves removal of metal diametrically from the raw material by feeding the tool parallel to the axis of the work to bring the work to required size.

4. **Taper turning:** Taper is a gradual increase or decrease in diameter along the length of the job.

Uses:

- Easy assembly and disassembly of parts.
- Giving self-alignments in assembled parts.
- Transmission of power (Clutch plates)

5. **Step turning:** Wherever more than one diameter is machined on a shaft, the section joining each diameter is called step or shoulder.

6. **Thread cutting on lathe by using single point cutting tool:** The principle of thread cutting is to produce helical groove on a cylindrical or conical surface by rotating the job at a constant speed and moving the tool longitudinally at the rate equal to pitch of the thread per revolution of the job.

Uses of thread:

- Transmission of motion (Half nut with lead screw)
- Fastening purpose (Nut and Bolt)
- Precision measuring instruments. (Micrometer)
- Lifting of load (Screw Jack)
- Elevating arm of drilling, milling and shaping machines.

7. **Knurling:** Knurling is the operation of producing straight lined diamond shaped or cross lined pattern on a cylindrical external surface by pressing a tool called knurling tool. Knurling is not cutting operation, but it is a forming operation.

Purpose of knurling:

A good grip and make positive handling
Good appearance
For raising the diameter to a small range

8. **Drilling:** Drilling is the production of cylindrical holes of definite diameter in a work piece by using multipoint cutting tool called drill. It is the first operation done internally for any further operations.

9. **Boring:** Boring is the process of enlarging and turning an existing drilled or core hole with a single point cutting tool.

10. Eccentric turning:
Concentricity: when different diameters are turned in a same axis, it is said to be concentric turning.
Eccentricity: When different diameters are turned on a different axes, it is said to be eccentric turning

Uses of eccentric turned jobs:

- Used in automobiles industry to convert rotary motion in to reciprocating motion
- Used in power press and press breaks.
- Used in automatic controls.

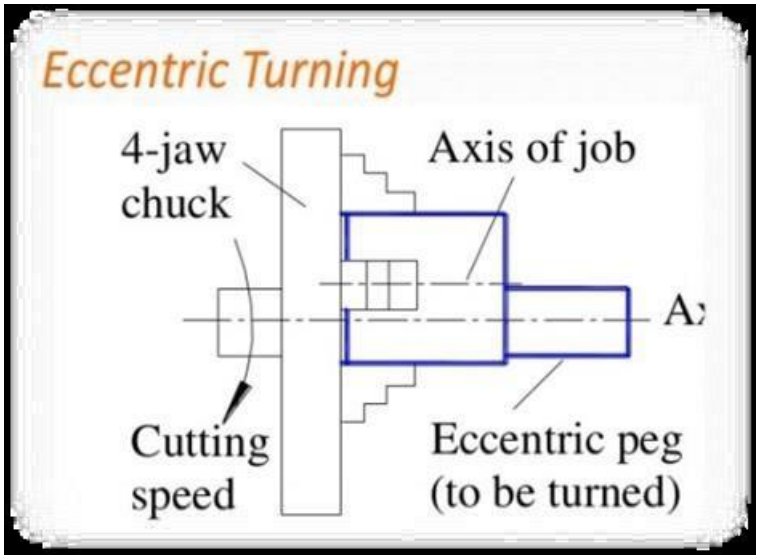

11. **Chamfering:** Chamfering is the operation of beveling the extreme end of the work piece.

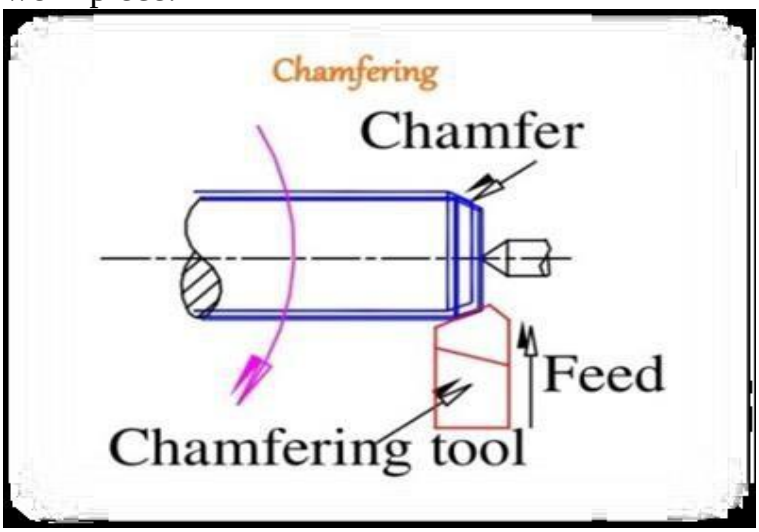

12. **Grooving:** Grooving is the process of reducing the diameter of a work piece over a very narrow surface.

13. **Undercutting:** Undercutting is similar to grooving operation performed inside a hole called undercut.

Safety precautions (Personal safety and Machine safety):

- Operator should follow various precautions to ensure of safe working conditions.
- Sleeves should be rolled up, rings, wrist watches, jewellery and neck tie removed.
- Wearing of uniform with shoes are very important.
- Tools should never be placed over lathe bedways.
- The tailstock should be moved to the extreme right on the bed ways.
- Do not attempt to operate the machine before receiving the instructions from the instructor.
- Never leave safe guards of lathe machine.
- Before starting any operation, always see the work and cutting tools secured first.
- Dis engages all the operating levers and places them in neutral position before starting the motor.
- Never leave the machine when it is running.
- Never mount or remove the work when machine is in running position.

- While machining such metal, which produces fine flying chip always wear goggle or use guard screen.
- Never wear loose clothing. Tie your sleeves up at wrist. Never handle chips with you bare hands; you should use special hook brushes or scrubbers to pull them away from the machine.
- Do not take measurement of the works while the machine is running.
- Do not try to stop the chuck with your hands.
- Keep the work place clean and tidy. Never allow the work pieces or other objects to line on the floor around the machine.
- During mounting the work piece on the lathe be sure to see the Centre hole are correct. (In sufficient depth of center hole is likely to result in the work breaking away while it is revolving).
- See that the chuck key is removed after the work has been clamped in the chuck.
- The machine should be always earthed, if electric motor, lightning appliances or the wires insulation get out of order report it to the instructor on duty.

Lathe specifications

- The maximum diameter of a work that is held between centres.
- The swing over the bed (this is the perpendicular distance from the lathe axis to top of the bed).
- The length of the bed.
- The length of the bed ways & type.
- The maximum length of work that can be turned b/n centers.
- The range of threads that can be cut.
- The capacity of lathe (Motor).
- Range of spindle speed.
- Range of feed.
- Size of the spindle nose

Work holding and supporting devices in machining process:

Chucks

Three jaw self-centering chuck – Used for holding round and other symmetrical works.

Four jaw independent chuck – used for irregular shapes (Ex: Square etc)

Centers
Used for support work pieces and take up the thrust due to metal cutting.

Carriers
Used to drive the work pieces when it is held between the two centers.

Face plates
Used for machining of flat plates.

Follower and Steady rests
Used to hold long work piece is machined.

Mandrels
Used to hold rotating a hollow piece of work.

Drill chuck
Used to hold in a tail stock center.

Machining parameters:

Cutting Speed :
Cutting speed means the number of meters measured on the circumference of the job that passes the cutting tool edge in one minute. It is denoted by a letter „V".

Unit: Meter per minute
Cutting Speed = V = π x D x N
1000
Where,
V = Cutting speed, m/min
D = Diameter of the work piece in mm,
N = Number of revolutions per minute.
For thread cutting, V will be about half of the cutting speed for longitudinal turning.

Speed: Speed is the number of circular motion of the spindle /work piece in one minute of time. Unit in RPM

Feed:
It is the amount of tool advancement of the job parallel to the surface being machined.
Feed is generally expressed in mm/rev

Depth of Cut:
It is the advancement of the tool in the job in a direction perpendicular to the surface being machined.

Depth of cut is generally expressed in mm

In a lathe, depth of cut is expressed as,
Depth of cut = D1 – D2 (mm)

Where, D1 – Diameter of the work piece before machining, (mm)
D2 – Diameter of the machined work piece. (mm)

Machining Time: The machining time in a lathe work can be calculated for a particular operation, speed of the work piece and feed length of the work piece is known.

Machine time is generally expressed in minutes

Machining Time = Length of cut (l) , minutes
Feed (f) x Speed(N)
l = Length of cut, mm
f = Feed, mm/rev
N=Speed, rpm

Example: A brass pin has a length of 500mm and of 40mm diameter. Find the turning to reduce the pin to 38.8mm in one pass, when cutting speed is 60m/min and feed is 0.8mm/min.

Cutting Speed = π x D x N/1000
60 = π x 40 x N / 1000

N = 478 rpm

Machine Time = Length of cut
Feed x RPM = 500
0.8 x 478 = 1.31 min

Lubrication of cutting fluids :

Lubrication chart

Lubrication:

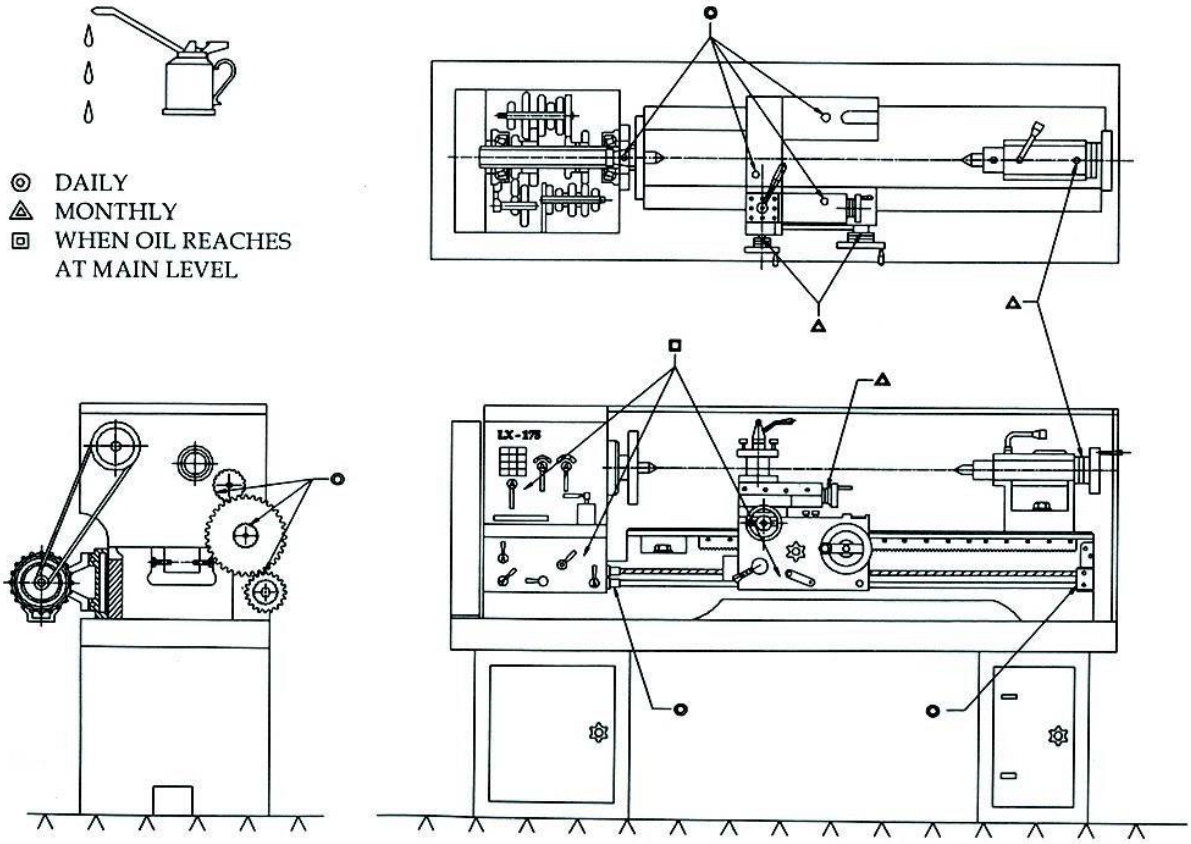

Lubrication:
Proper lubrication is very important. The accuracy of the lathe depends on the proper and regular lubrication. Lubrication instructions are displayed in a lubrication chart. If the lubrication is neglected then the bearing surfaces may damage, impairing the accuracy and shortening the life of the machine.

Before putting the machine in operation, all the Oil cups, Apron, Norton Gear Box & Head stock should be checked and filled with oil until the oil reaches the "Red Line" in the oil sight glass.

Assembly Wise Lubrication Instruction

1) Head Stock

- Threads on the spindle nose should be always cleaned and oiled before mounting the chuck plate or faceplate.
- Head stock body should be filled with oil. The level of the oil should be always maintained. The oil used for head stock is EP – 90 Gear Oil.
- Oil nipple, on the various parts like brackets etc. must be properly filled with oil.

2) Tailstock

There are two oil holes plunged by oil cup and by oil nipple. Oil cup carry oil to the housing and tailstock quill.

3) Apron

A hole is provided in the front face of apron to pour oil in apron. Pour the oil till level comes up to the "Red Mark" on the oil sight glass of the apron. The oil used for apron is EP–140 Gear Oil.

All the rotating parts and bearings of the apron are splash lubricated. An oil-drain plug is provided at the bottom to change the oil.

4) Saddle

Two oil cups are provided on the top face of the saddle. Fill these cups with oil daily. Oil flows and reaches to the Flat and V- guide ways of the bed.
Surfaces Screw should be lubricated by the nipple, which is given on the screw boss. Two oil nipples are provided on the top face of the surface slide, which carry oil in both the guide ways of the saddle.

5) Compound Slide

Two oil nipples are provided on the front face of the compound slide, which carry the oil for both the guide ways of the slide.
To oil the housing of the compound slide oil nipple is provided on the compound boss.

6) Lead Shaft & Feed Shaft

Clean the lead shaft, feed shaft & rack with the cotton waste daily & oil the same

properly.
Both lead screw brackets (Front and Rear) having an oil nipple on the tiny top face, which supply oil to the bearing and housing.

7) Norton Gear Box
Norton gear box should be filled up by Gear EP–90 to get proper efficiency of the gear box. An oil sight glass is provided on the Norton to check the oil level. Change the oil when it is required.

8) Guide Ways
Before starting the lathe, operator should always clean both the guide ways of the bed thoroughly and should oil properly

Advantages of using cutting fluids during machining
The advantages of cutting fluids in machining operations are:
i. Increase of tool life by cooling the cutting edge.
ii. Decrease tool chip friction.
iii. Provide better finish on the workpiece.
iv. Reduce forces on tool hence economic power consumption.
v. To maintain its dimensional accuracy
vi. Discourge corrosion of newly machined surface
vii. Lubricate machine movements.

Maintenance
1. Careful maintenance will increase the life and efficiency of the machine.
2. Any defect however small it should be immediately rectified otherwise this will lead to a major breakdown of the machine resulting in loss of prevention and high cost of repair.

Preventive maintenance and its advantages.
Preventive maintenance means planning and scheduling the maintenance in advance.
1. To avoid sudden break down of machine.
2. Damage of costly parts are avoided.
3. Shut down of production is avoided.
4. Longer life of the equipment is ensured.
5. Possibility of serial accidents is minimized.
6. Preventive maintenance is less cost than break down maintenance.

Nomenclature of single point cutting tool :

The signature is a sequence of numbers listing the various angles in degrees, and the size of nose radius. The seven elements that comprise the signature of a single point cutting tool stated in the following order:

8 – 14 – 6 – 6 – 6 – 15 – 4

has 80 back rake angle, 140 side rake, 60 end relief, 60 end or side relief, 60 end cutting edge and 150 side cutting edge angles and 4 mm nose radius.

Pictorial View of Single point cutting tool

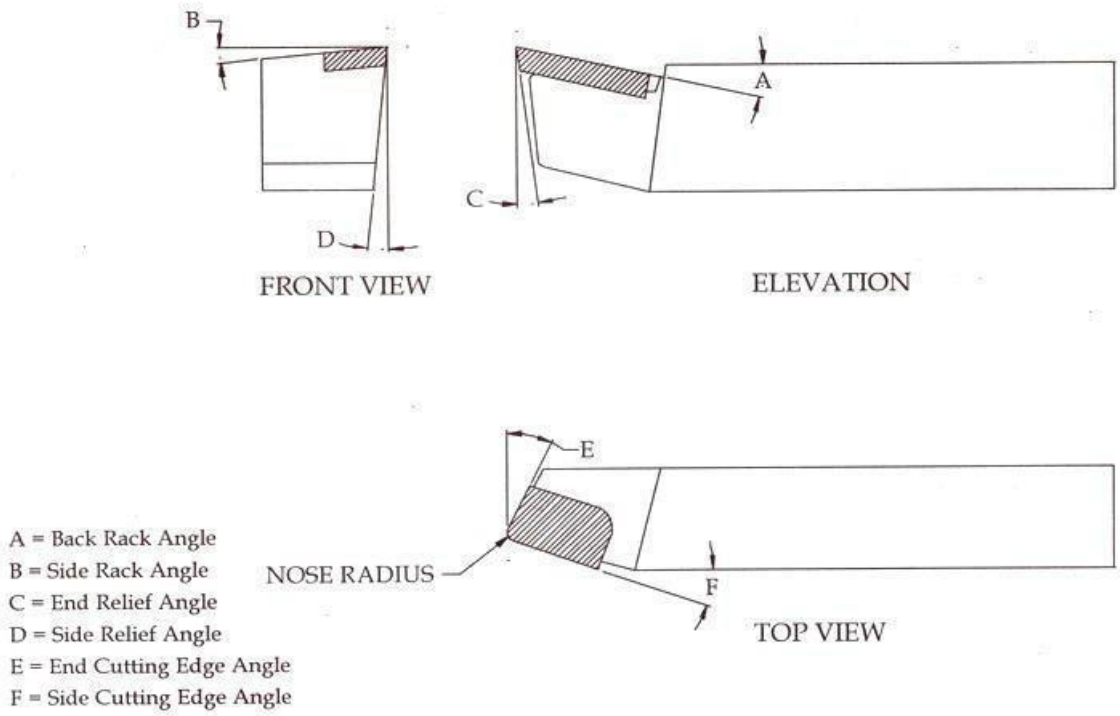

A = $12^0 – 14^0$, B = $12^0 – 14^0$, C = 6^0, D = 6^0, E = 30^0, F = 12^0

JAIDEV EDUCATION SOCIETY'S
J D COLLEGE OF ENGINEERING AND MANAGEMENT
KATOL ROAD, NAGPUR
Affiliated to Dr. Babasaheb Ambedkar Technological University, Lonere
Website: www.jdcoem.ac.in E-mail: info@jdcoem.ac.in
An Autonomous Institute, with NAAC "A" Grade

Session: 2022-23

FIRST YEAR SEM-II (Regular)

B. Tech. Branch (AI, CSE, IT, DS)

Job Drawing – Machine Shop

Name of the job: To make a Turning job on M.S. Round Bar.

Require Tools and Equipments: Tool post key, chuck key, Single point cutting tool, vernier caliper, chalk, Knurling tool etc.

Raw material: M.S. round bar length x diameter 40 mm x 85 mm – 1 Nos (Tolerance = +/- 2 mm)

Job Drawing:

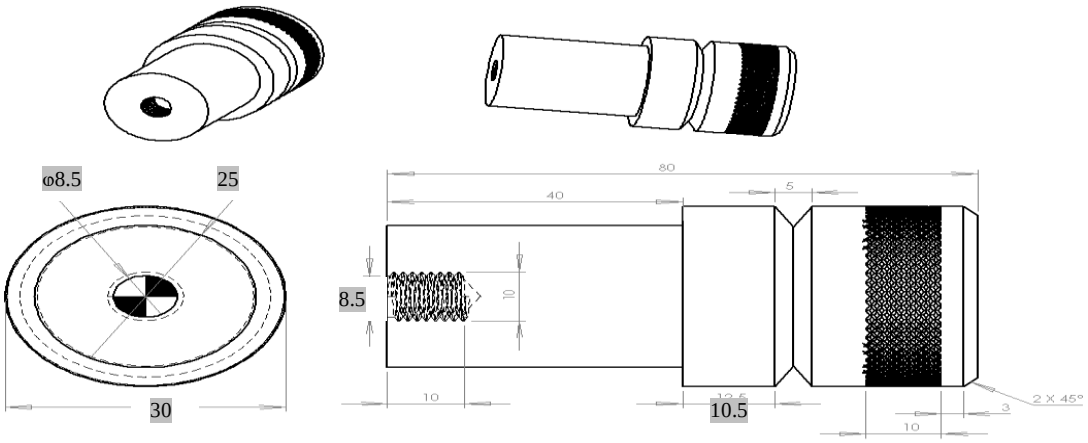

Note: All Dimensions are in mm **Scale: Not to Scale.Tolerance ± 1 mm consider.**

Job Operations:

Sr. No.	Operation Name	Sr. No.	Operation Name
1	Step turning	4	Grooving
2	Facing	5	Knurling
3	Drilling	6	Chamfering

NAME OF THE SHOP :- Machine Shop

NAME OF THE JOB :- To make a Turning job on M.S. Round Bar.

MATERIAL REQUIRED:- M.S. round bar length x diameter 85 mm x 32 mm – 1 Nos (Tolerance = ± 2 mm)

TOOLS AND EQPT. REQUIRED:- Tool post key, chuck key, Single pointcutting tool, vernier caliper, chalk, Knurling tool etc.

OPERATION SHEET:-

S.N.	OPERATION	TOOLS REQUIRED	PROCEDURE
1	Cutting	Power Hack Saw cut off M/C	Cut length of job of 85 mm
2	Facing	SPCT (Single point cutting tool)	Cut length of job by 2 mm in facing operation (Set SPCT tool in 30° in tool post & cutting feed by cross slide. Workpiece should be rotate in max 450 RPM & Depth of cut of 1 mm should be maintain)
3	Turning	SPCT (Single point cutting tool)	Reduce diameter of job 32 mm to 25 mm in 40 mm length (Step) by following procedure Depth of 1 mm should be maintain in every cut (So 7 cuts are required to create 25 mm Dia Step)
4	Drilling	Drill bit (8.5 mm pitch 1.5 mm) , Drill Chuck	Fit drill chuck into tail stock tapered hole. Fit drill bit (8.5 mm) into drill chuck. Loose tail stock movement & Set its position movement & set its position to center of job & fix tail stock position. (This process called as work part zero

			for drilling operation) Feed drill bit into workpiece by rotating tailstock wheel for drilling operation by length of 10 mm.
5	Fitting	-	Procedure: Reverse job direction & Fit Stepped turned job into jaws of lathe chuck.
6	Facing	SPCT (Single point cutting tool)	Same process will be followed by previous facing operation. To cut 3mm material from workpiece length [final length of job 80 mm should be maintain]
7	Turning	SPCT (Single point cutting tool)	Follow the same procedure of step turning for reducing 32 mm dia to 30 mm dia with 1 mm depth of cut (Material should be cut in 2 cuts)
8	Chamfering	(Grooving tool) SPCT 60o V tool	Set SPCT 60o V tool position in 45o at facing side of workpiece. Cut edge material of workpiece by 2 mm by maintaining 1 mm depth of cut.
9	Knurling	Knurling tool	Set knurling tool in tool post . Make knurling impression on W/P only in single feed by 10 mm length from facing side.
10	Grooving	(Grooving tool) SPCT 60° V tool	Fit SPCT 60o V tool into tool post . Set Cutting tool at distance 27.5 mm from facing side. Feed groov tool into 3 mm deep in work piece with 1 mm depth of cut.
11	Tapping	10 mm Tap , cutting oil can	Fit Tap in tap wrench. Perform tapping operation by 10 mm in 8.7 mm drill hole. Use cutting oil while performing tapping operation.

Result: The Turning job on M.S. Round Bar is successfully done.